KITCHEN
SYSTEMS

FRANKE

SPECIFICATION SHEET

PRODUCT FAMILY : **Sinks** FINISH : **Stainless Steel** SERIES : **EUROFORM** MODEL : **EFX 651**

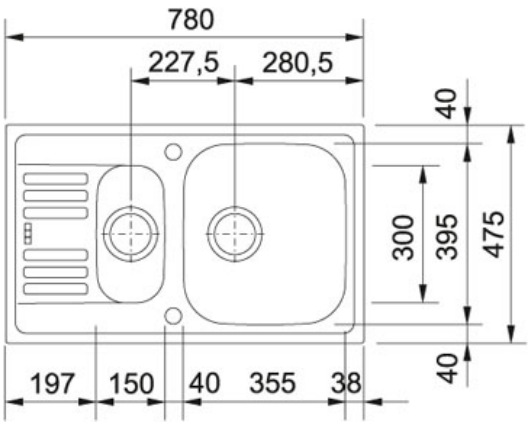

Product Information

Article number	101.0277.445
Cabinet Size	600-MM
Waste Outlet Diameter	3-1/2"-TWIST-CONTROL-WASTE
Tap Hole	2
Dimensions	780-MMx475 mm
Bowl Size	355 mmx395 mmx150 mm
Small Bowl Size	150 mmx300 mmx80 mm
Number of Bowls	1 1/2
Cut-Out Size	760 mmx455 mm
Position of Drainer	REVERSIBLE

Characteristics

- Edge profile standard
- Edge profile undermount
- Waste outlet 3.5_2
- Reversible
- Waste kit with remote twist control
- Bowl Radius 90
- Edge profile under glued

KITCHEN
SYSTEMS

Accessories

112.0006.057